TECHNIFLO®

50PX-Z

Tech Data Sheet

Model	50PX-Z
Impeller size (mm)	59
Liquid SG	1.2
Speed (rpm)	2900

Features

- Pumps come close coupled to standard 20W, 230 Volt motor.
- Non-Metallic wetted parts: Polypropylene casing with Viton front casing O-ring. (option: EPDM O-ring)
- Liquid Temperatures up to 60°C.
- 18mm suction & 18mm discharge ports hose tail or 3/4" suction & 3/4" discharge for BSP threaded
- High head

Performance Curves

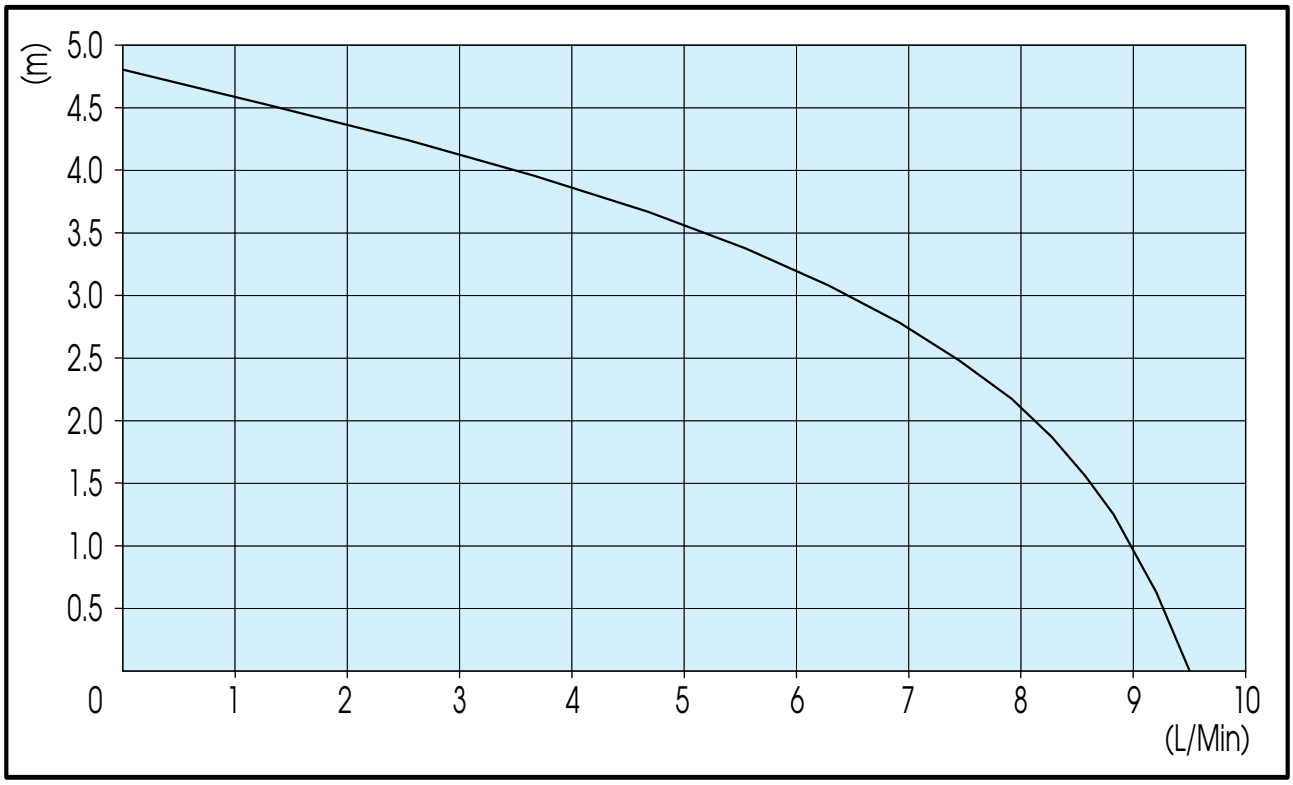

Dimensions

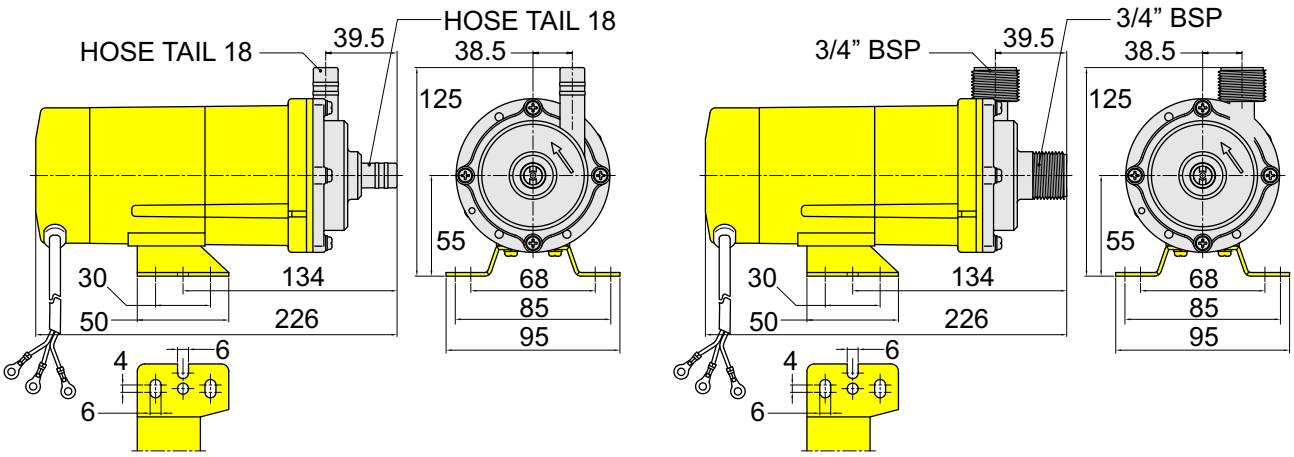

S41043